SEE SPECIFICATIONS : MCPTSF

NOTES:

1. 3/16" PLATE (TYP. 4 SIDES)
2. 16 GA. PRIME PAINTED STEEL JAMBS
3. WIRE COVER CHANNEL
4. CONTINUOUS GEAR HINGE
5. U.L. LISTED BULLET RESISTANT COMPOSITES
6. HARDWARE: FALCON X581 LOCKS, VON DUPRIN 6211DS FAIL SECURE ELECTRIC STRIKES

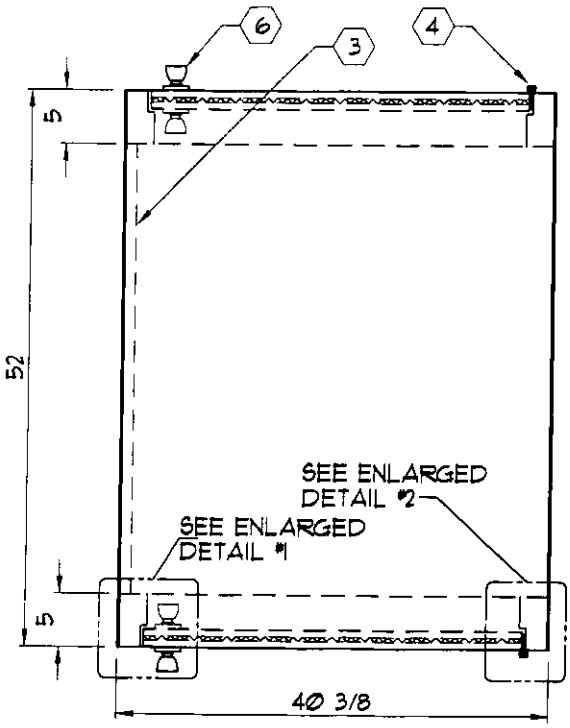

PLAN VIEW

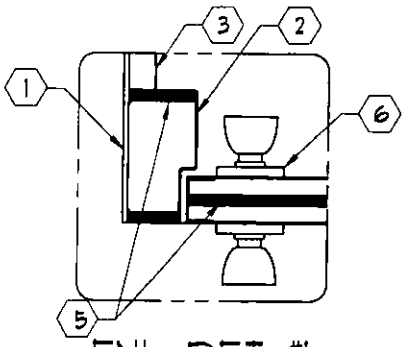

ENL. DET. #1

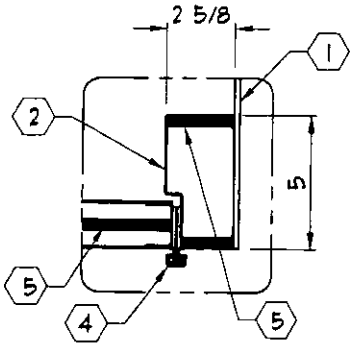

ENL. DET. #2

(DETAILS SHOWN WITH OUT TOP PLATE AND HEAD JAMB FOR CLARITY)

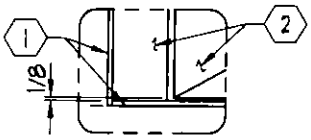

ENL. DET. #3

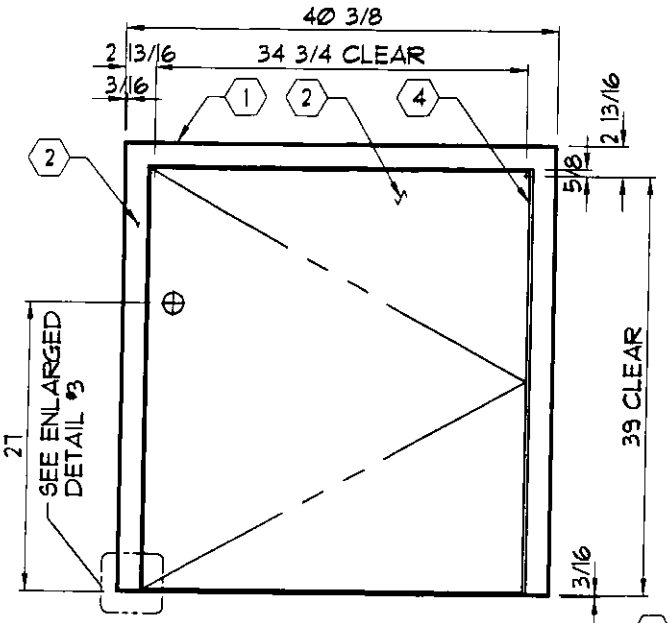

ELEVATION

(_ - REQUIRED)

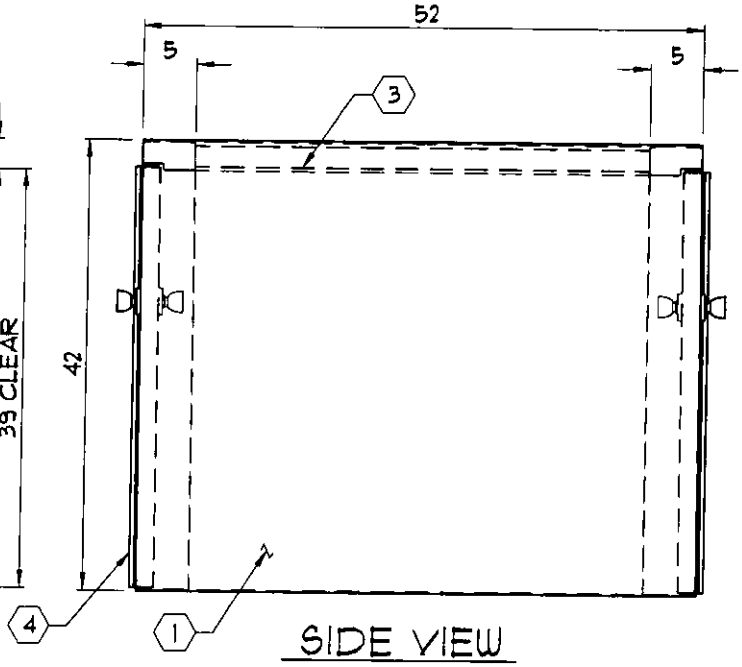

SIDE VIEW

REVISIONS		
No.	DESCRIPTION	DATE

ARMORTEX® BULLET / BLAST RESISTANT PRODUCTS

5926 CORRIDOR PKWY SCHERTZ, TX 78154

TEL: 210-661-8306 800-880-8306 FAX: 210-661-8308

TITLE: ARMORTEX® BULLET RESISTANT MONEY CART PASS - THRU

UNLESS OTHERWISE SPECIFIED ALL DIMENSIONS ARE IN INCHES

PROJECT NAME:

SCALE: NONE

PROJECT No.:

BALLISTIC LEVEL

DRN.BY: A. Perez DATE: 02-16-07

CHKD.BY: DATE:

DRAWING No.: P1013005

SHEET: 1 OF 1

C:\ARMORTEX MASTERS - 2007\PACKAGE RECEIVER\P1013005.DWG.DWG 02/15/07 @ 16:16 User aperez