SEE SPECIFICATIONS : TWCSISP

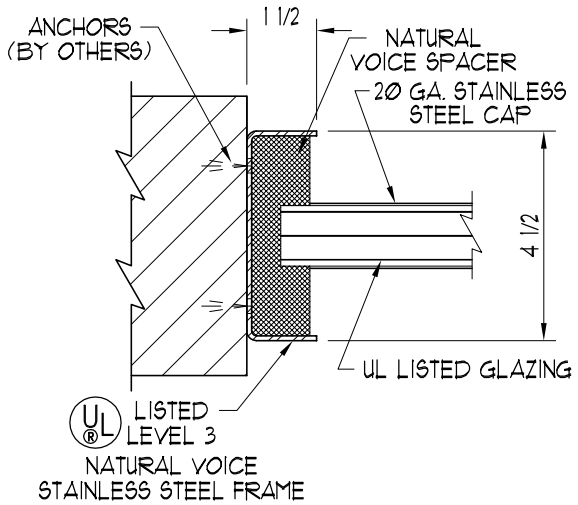

JAMB

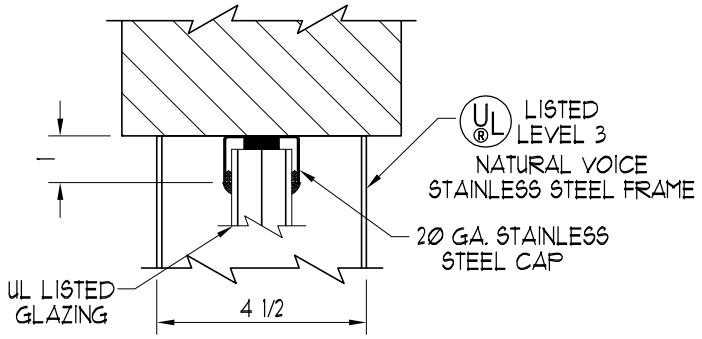

HEAD

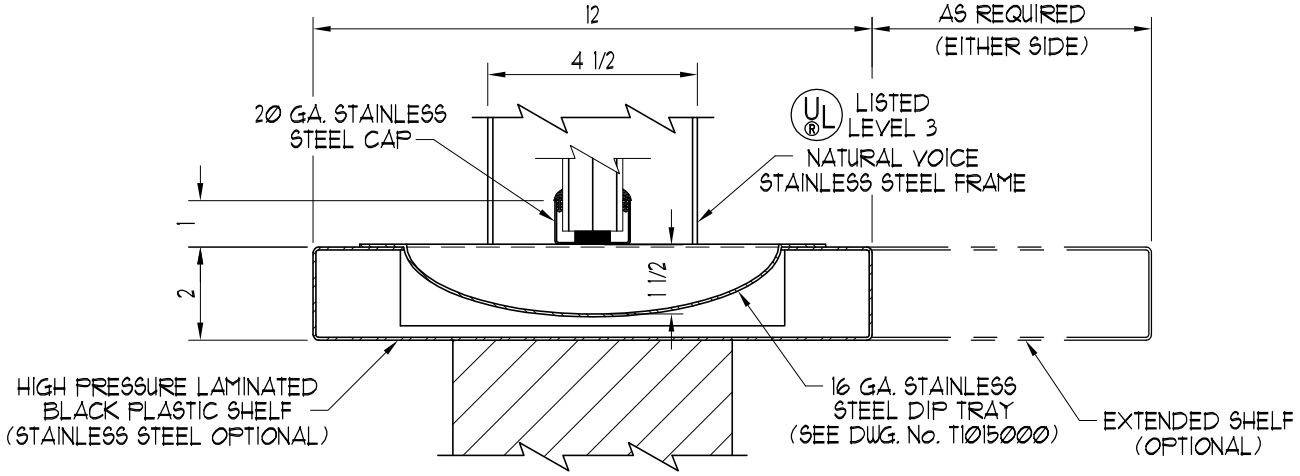

SILL

REVISIONS		
No.	DESCRIPTION	DATE

ARMORTEX® BULLET / BLAST RESISTANT PRODUCTS
5926 CORRIDOR PKWY SCHERTZ, TX 78154
TEL: 210-661-8306 800-880-8306 FAX: 210-661-8308

TITLE: ARMORTEX® BULLET RESISTANT TRANSACTION WINDOW JAMB DETAILS

PROJECT NAME:

UNLESS OTHERWISE SPECIFIED ALL DIMENSIONS ARE IN INCHES

SCALE: NONE

PROJECT No.:

BALLISTIC LEVEL

DRN.BY: A. Perez DATE: 02-16-07

CHKD.BY: DATE:

DRAWING No.: W1011014 SHEET: 1 OF 1

C:\ARMORTEX MASTERS - 2007\WINDOWS\W1011014.DWG.DWG 02/13/07 @ 09:43 User: aperez