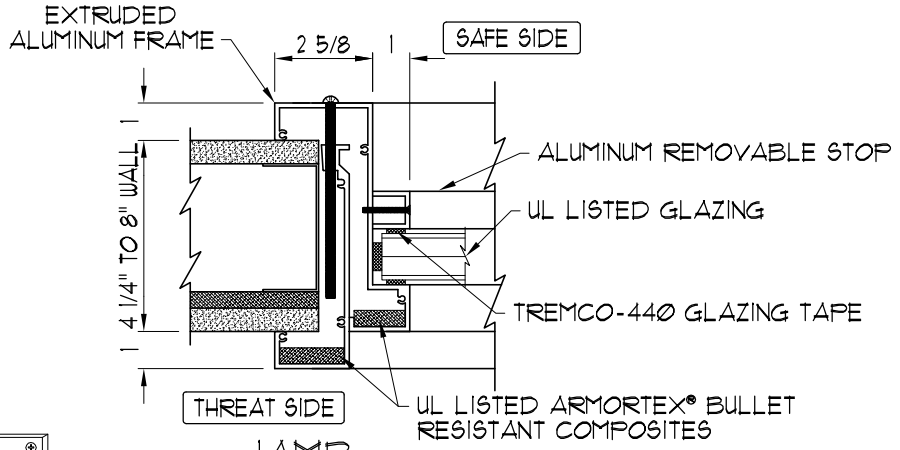

JAMB

ALL ALUMINUM TO BE CLEAR ANODIZED

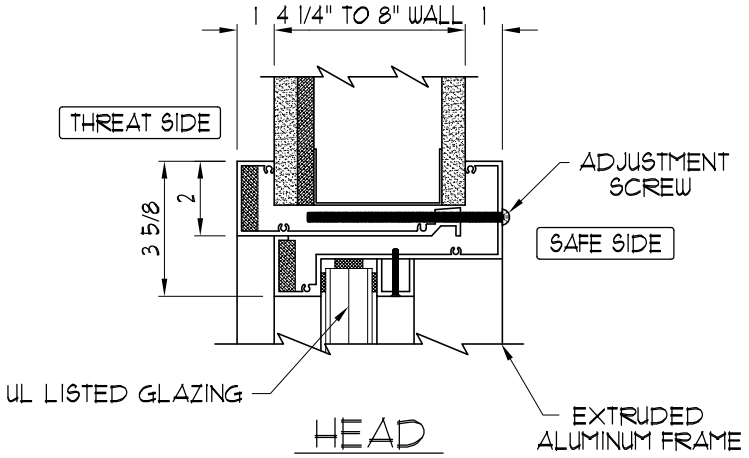

HEAD

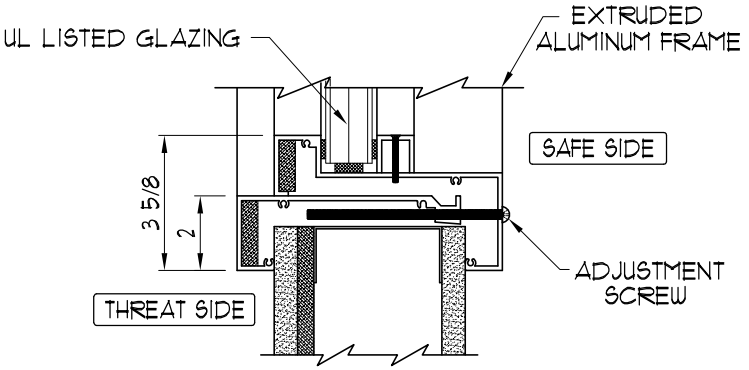

SILL

REVISIONS			ARMORTEX® BULLET / BLAST RESISTANT PRODUCTS		BALLISTIC LEVEL	
No.	DESCRIPTION	DATE	5926 CORRIDOR PKWY SCHERTZ, TX 78154		DRN.BY: A. Perez	DATE: 02-16-07
			TEL: 210-661-8306 800-880-8306 FAX: 210-661-8308		CHKD.BY:	DATE:
			TITLE: ARMORTEX® BULLET RESISTANT CLAMP-ON ALUMINUM FIXED WINDOW FRAME DETAILS	PROJECT NAME:		
			UNLESS OTHERWISE SPECIFIED ALL DIMENSIONS ARE IN INCHES	SCALE NONE / PROJECT No.	DRAWING No. W1011532	SHEET 1 OF 1

C:\ARMORTEX MASTERS - 2007\WINDOWS\ALUMINUM\W1011532.DWG.DWG 02/14/07 @ 11:23 User: aperez